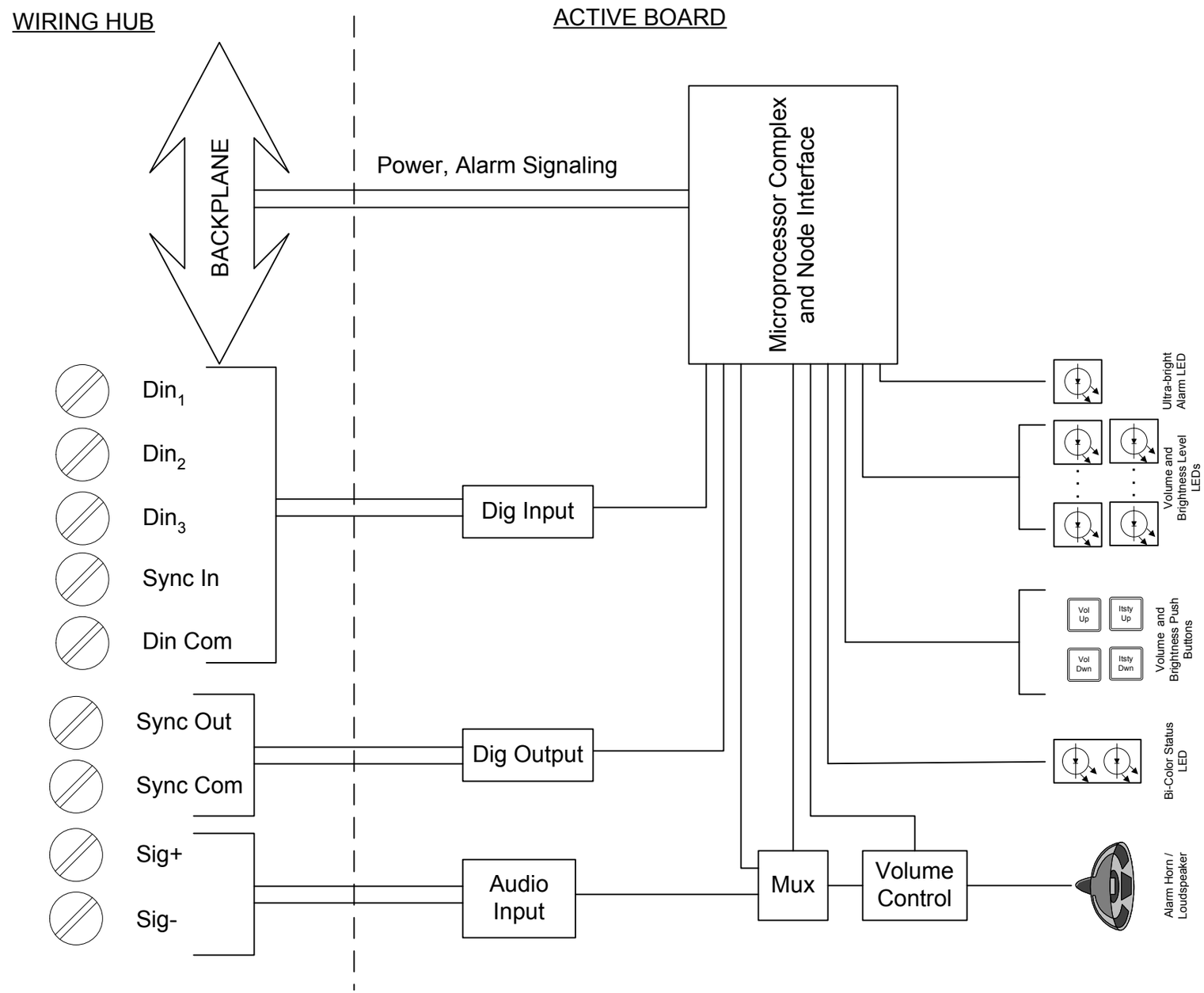Audio Visual Notification Module, Type 1 (AVN-1) Module Topology